527.91
A512in

A.L.A. -- WAR SERVICE

INSTRUCTIONS FOR CAMP LIBRARIES

Sec 7 -

027.91
A512in

INSTRUCTIONS TO CAMP LIBRARIANS

Preliminary Draft

-o-o-o-

OPPORTUNITY

The establishment of libraries in camps on the scale now contemplated by the American Library Association marks the beginning of a new era in the development of libraries. The selection of the American Library Association by the Government for this work affords the Association a splendid opportunity and places upon it a grave responsibility.

It will rest with the representatives of the A.L.A. who are selected to administer the camp libraries to demonstrate to the Commission on Training Camp Activities and government officials in general, that their confidence in the A.L.A. is justified.

Camp life should afford a rare opportunity for effective library work. Each camp will consist of from 10,000 to 50,000 healthy, vigorous, young men, representing a great variety of trades, industries and professions. The percentage of potential readers in the camp will probably be much higher than a similar percentage in home communities of the same size. Other factors which will contribute to the success of work in the camps will be the common cause in which all are engaged, the definite provision for hours for recreation, and the opportunity of dealing with large groups of men of the same age and similar tastes.

This present movement is the opportunity for which we have been waiting. It is an opportunity to demonstrate to the MEN of America - both those in military service and those in the higher circles of governmental activities - that library work is a profession; that we librarians are in this work because it offers expression to our ideals; that we are not only professional men and women, but that we are business people, who can engage in a nation-wide undertaking

53231

027.91
A512in

from a national point of view.

CREDENTIALS

A letter of introduction to the proper military authorities is enclosed herewith as is also an identification card which you should have endorsed by the commanding officer or other military authority in the camp.

TRAVELING EXPENSES

As you are paying your traveling and personal expenses, these should be itemized into a statement and presented later to the War Service Committee.

QUARTERS AND BOARD

The Library buildings to be erected in the permanent camps, in accordance with plans already approved, provide library quarters for the librarian and assistant. Pending construction of such buildings, however, each librarian must make his own arrangements for lodging and meals, within the camp if possible. We strongly advise each librarian to take advantage of the information which the Y.M.C.A. secretaries and welfare workers, already on the ground may have in their possession.

STATUS

Since the American Library Association has been appointed by the Government to provide libraries for the camps, and is working under the Commission for Training Camp Activities; each camp librarian should realize that he is officially a representative of the War Department and is recognized as having a definite legal status in the camp.

The question of a uniform is being considered and instructions in regard to it will be sent you later.

RELATION TO ARMY OFFICERS, Y.M.C.A., KNIGHTS OF COLUMBUS, ETC.

The advice given Secretaries in the Manual prepared by the Y.M.C.A. a copy of which is enclosed, will be helpful to camp librarians.

from a national point of view.

CREDENTIALS

A letter of introduction to the proper military authorities is enclosed herewith as is also an identification card which you should have returned by the commanding officer [illegible]

TRAVELING EXPENSES

As you are paying your traveling and personal expenses, these should be itemized into a statement and presented later to the War Service Committee.

QUARTERS AND BOARD

The library buildings to be erected in the permanent camps, in accordance with plans already approved, provide library quarters for the librarian and assistants. Pending construction of such buildings, however, each librarian must make his own arrangements for lodging and meals, within the camp if possible. It probably will be [illegible] the Y.M.C.A. secretaries and [illegible] on the ground [illegible] their possession.

STATUS

Since the American Library Association has been appointed by the Government to provide libraries for the camps, and is working under the Commission for Training Camp Activities, each camp librarian should realize that he is officially a representative of the War Department and is entitled to [illegible] a definite legal status in the camp.

The question of a uniform is being considered and instructions in regard to it will be sent you later.

RELATIONS TO CAMP OFFICERS, Y.M.C.A., KNIGHTS OF COLUMBUS, ETC.

The advice given Secretaries in the Manual prepared by the Y.M.C.A., a copy of which is enclosed, will be helpful to camp librarians.

The National officers of the Y.M.C.A. and Knights of Columbus have pledged the hearty co-operation of their associations and have, we understand, notified their camp secretaries of their action. It remains for the camp librarians to establish friendly relations with the secretaries and to work out with them a comprehensive and satisfactory plan of co-operation. Please report as soon as possible as to the number of Y.M.C.A. buildings, K. of C. buildings, etc. in the camp, at which branch libraries can be established.

RELATION TO THE A.L.A.

The War Service of the Association is in charge of the War Service Committee, the actual activities in the camps being under the direction of Mr. M. S. Dudgeon, with headquarters in the Public Library, Washington, D. C.

DUTIES

The camp librarian is in a unique position. He is a pioneer. His duties have been established in detail by neither regulation nor precedent. The function of the librarian is to see that there is made accessible to every individual in the camp the printed page which will add to his enjoyment or to his effectiveness.

The administration of camp libraries is a task that engages the best that is in a man. It calls for resourcefulness, energy, enthusiasm, and tireless industry.

In all that is done camp librarians should bear in mind the fact that our aim is SERVICE rather than perfection of system. The Committee, therefore, accords camp librarians the utmost latitude in working out the details of administration and suggests that only such system be installed that will result in the most efficient service.

Briefly stated his duties are as follows:-

1. To yield absolute obedience to all the rules of the camp.

2. To establish cordial relationship with military authorities.

3. To harmonize and co-ordinate all library activities in and related to the camp, this being done by offers of aid rather than by demands for centralization.

4. To assist army chaplains in any library work already inaugurated by them.

5. To demonstrate that the librarian is in the camp to help other welfare and educational agencies, not to compete with them.

6. To co-operate with the community houses established by the Commission on Training Camp Activities in cities adjacent to the camp, and with the local libraries.

7. To report to the Director of Camp Libraries as soon as present conditions at the camp have been thoroughly investigated.

(a) Number and location of the books already at the camp.

(b) Assistancebeing given your particular camp by local libraries, and agencies, or home libraries or agencies, such as subscriptions to newspapers and magazines, supply of books, etc.

(c) All inquiries as to books and magazines requested for purchase should be sent to C. H. Brown, Brooklyn Public Library, if copy to Director of Camp Libraries.

ASSISTANTS

The experience of the Y.M.C.A. indicates that volunteers may be secured to assist in recreational work. In order to know the conditions at your camp, please let us know whether such members are available for library work and how much you can depend upon them or how much additional professional assistance you deem necessary for your camp and when you will need this assistance.

LIBRARY BUILDINGS

Plans both architectural and financial are under way to provide a substantial library building in each cantonment, and a building of more temporary character in each National Guard Camp.

Pending the erection of such buildings, temporary quarters should be secured, through the Commanding Officer. When separate buildings or tent cannot be secured, the Y.M.C.A. or other welfare agency will, in all probability, be willing to afford temporary accommodations.

Don't wait for completion of building before getting to work, Use the Y.M.C.A., the K. of C., and any other distributing agencies as branch libraries that you can find.

ORGANIZATION & CONDUCT OF LIBRARIES

The plans thus far formulated provide for a central collection in each cantonment with distributing agencies scattered throughout the camp in Y.M.C.A. and Knights of Columbus buildings, stores, and other available places. The camps will be divided according to military groups and to do the most effective work it may be necessary to provide a distributing point for each division of a certain size. This part of the work may have to develop gradually or the cart may be put before the horse, and the small distributing stations established before the library building is ready.

Shipments of books donated for this work have been ordered sent you and orders for new books on the Preliminary List selected by the Committee on Book Selection will be placed as soon as funds are in hand and will be shipped to you direct from the publishers.

Instructions in relation to the checking of bills, etc. will be sent you with the first shipment of purchased books.

CATALOGUE AND ACCESSION

To simplify work at the camp no catalogue other than the printed list will be installed, for the present.

In order to enable you to tell the number of books at your camp, it is suggested that a simple accession record be kept giving merely the number of the book in the printed list together with the number of copies of each in your collection.

It may also be desirable to try to keep record of the disposition of the various copies. If so it may be done by entering the record in the following manner: 1 F 1, L, 3, D, 5, L, 7, 8, etc.

CHARGING SYSTEM

The Committee on Camp Libraries has planned to simplify the usual practice in lending libraries so that only the absolutely essential records shall be kept. The A.L.A. will be considerably helped in the conduct of this work by the military organization of the camp. This obviates the necessity for the usual registration records. As troops are moved, the co-operation of regimental officers can usually be enlisted to insure the return of books.

A simple method of book numbering has been devised.

Each class of books in the preliminary list will be numbered consecutively with a letter designating the class and a number indicating the copy following. For example: the first book on the list, Adams, Andy "Cattle Brands" will be numbered 1 F 1, for the first copy placed in the collection, 1 F 2, for the second, 1 F 3, for the third if purchased, etc.

The combination will form the call number for the individual copy of each book in place of the usual practice of having a number for each title.

A label indicating ownership and with space for the call number will be placed on the outside front cover of each book.

Books will be charged simply by recording the number of the book, name of the borrower, his regiment and company on a 3 x 5 slip. This slip should be canceled when the book is returned.

The most convenient method of filing will undoubtedly be in numerical order,

the slips for each day being filed with those previously issued, after a record has been made of the number circulated.

A book plate in acknowledgment of donations has been used in the campaign in some sections of the country and some of these may be sent you to be pasted in the books of your collection. You will notice that these book plates have been carefully worded so that acknowledgment is made of a contribution to the War Service Fund and not of the donation of a particular book.

SUPPLIES

A small quantity of book plates are being shipped to you, a sample of which is enclosed. Inasmuch as conditions vary at the different camps please let us know at once whether ordinary supplies can be secured and whether printing can be done in the vicinity of the camp.

RECORDS AND REPORTS

Inasmuch as the American Library Association is under a moral obligation to the American public to show that the funds contributed have been wisely expended, we cannot dispense with all records of use.

In addition to the financial records to be kept by the Treasurer - each camp librarian should keep such record of the use of the library building and books as will satisfy those interested in the establishment of these libraries that their contributions were made to a worthy cause and have added to the well-being and happiness of the soldiers.

A simple record should therefore be kept of the circulation and when possible a count should be made at intervals of the number using the building. Note should also be made of "human interest" stories.

SUGGESTIONS

The Y.M.C.A. by reason of its experience on the border and in the actual war zone is in a position to give valuable advice to those entering upon service simi-

[illegible] for each day [illegible] filed with those previously issued, [illegible] record [illegible] made of the [illegible] A.

[illegible] plate [illegible] has been used in the [illegible] [illegible] be sent [illegible] is [illegible] collection. You will notice that [illegible] plates have been [illegible] contribution to the [illegible] of the donation of a particular book.

SUPPLIES

A small quantity of book plates are being shipped to you, a supply of which [illegible] enclosed. Inasmuch as conditions vary at the different camps please let us know at once whether ordinary supplies can be secured and whether printing can be done in the vicinity of the camp.

RECORDS AND REPORTS

In [illegible] the American Library Association is under a moral obligation to the American public to show that the [illegible] contributed have [illegible] [illegible] cannot [illegible] all records of use.

In addition to the financial records to be kept by the Treasurer — each camp [illegible] record of the use of the library building and books [illegible] interest to the [illegible] that their contributions [illegible] have added to the [illegible] and happiness of the soldiers.

A simple record should therefore be kept of the circulation and when possible [illegible] at intervals of the number using the building. Note should [illegible] made of "unusual" or "human interest" stories.

SUGGESTIONS

The [illegible] by means of its [illegible] on the bulletin and in the normal way [illegible] is in a position to give valuable advice or [illegible]

lar to that in which their men have been engaged. We therefore commend to your attention the manual prepared by the Association for its camp secretaries and in particular would call your attention to Section X dealing with health hints; to the hints on personal equipment on page 26 and elsewhere; and to the very helpful information relative to insignia on page 51, et seq.

These instructions are of necessity tentative. The Committee on Camp Libraries will appreciate your suggestions of such modifications, amplifications or amendments as will make these instructions of the utmost help to those who will succeed you in the care of these libraries.

027.91
A512x

January 12, 1918.

To the Camp Librarian:

A campaign for books for soldiers and sailors is about to be started. It will be an intensive campaign during some week in February, and after that, we hope, a continuous campaign.

A publicity man has been engaged and the enclosed Press Bulletin is the first of a series that will be issued. It will go to camp librarians, to library commissions and to some three hundred public libraries.

We shall be largely dependent upon the camp librarians for our publicity material. We are therefore asking:

1. That you send us some pictures illustrating the camp library work. (Very important. Please rush).

2. That you tell us what kinds of books,- what specific books- are most in demand.

3. That you send anything and everything that may have news value or be of "human interest", including quotations from soldiers and Y. M. C. A. secretaries about the Camp Library Service.

4. That you get into touch with all the newspaper correspondents in your camp and get their active cooperation.

5. That you offer your cooperation to the local public librarians and the State Library Commission, if there is one.

6. That you do all this at once. I know you are busy, and that you very naturally dislike to interrupt your regular work in order to make reports, etc. But this is very urgent, and for the good of our work as a whole. I trust, therefore, that we may have your immediate cooperation.

Yours very truly,

HERBERT PUTNAM

General Director.

027.91
A512x

Lib Sch

APR 22 '18

AMERICAN LIBRARY ASSOCIATION

LIBRARY WAR SERVICE

Headquarters
Washington, D. C.

April 10, 1918

To the Camp Librarian:

Except in the case of two or three camps already supplied with gift books, there are shipments, resulting from the recent book drive, now on the way to every camp. Each Camp Librarian has already been advised of this by a paragraph in Informational Circular No. 8, and by letters from Headquarters or from public libraries themselves, giving the number of books and cases being sent and the date of shipment, so that the Camp Librarians might be prepared for their arrival.

It is quite likely that some camps may get more boxes than they can take care of. Some plan for storing these boxes should be devised in advance. Perhaps arrangements can be made to place them temporarily in Quartermaster or other camp buildings. In the case of library buildings that stand well up from the ground, it might be possible to store these books underneath, provided they are kept up from the ground on a platform and are perfectly protected from theft and from the weather. It has already been suggested to several camps that they have shelving built along the inner wall of one of the bedrooms. This space is very good for storage, as it need not interfere with the other uses of the room.

Very truly yours,

For the General Director

Joseph L. Wheeler

Assistant to the Director

027.91
A512X

Lib Sch

_____
(Library or Library Commission)

_____
(Date)

To the Camp Librarian
or some one acting in that capacity:

We have made the following shipment of gift books to you by _____.
(State how shipped)

Date	Boxes	Volumes	Address

Yours very truly,

Please send this report promptly
to the person for whom the
books are intended

J 28'18 - 500

LIBRARY WAR SERVICE
AMERICAN LIBRARY ASSOCIATION
LIBRARY OF CONGRESS
WASHINGTON, D. C.

027.91
A512x

Lib Sch

AMERICAN LIBRARY ASSOCIATION

LIBRARY WAR SERVICE

Headquarters
Washington, D.C.

August 6,1918.

To the Camp Librarian or Supervisor:

You are instructed by the War Department to send to headquarters, by parcel post insured, all copies in your camp library or in camp libraries under your supervision, of Kirby "Manual of Camouflage" published by E. N. Appleton. Please remove all copies from the shelves and look up all charges for copies in circulation and recall them immediately. Send without delay the copies you now have on hand, and the remainder as soon as returned. They will be forwarded to the Adjutant General's Office.

Also, acting under similar instructions, please withdraw all copies of Kirby & Schoonmaker "Manual of Bombing and Grenades" and Kirby "Manual of Gas in Attacks and Defense". "These books are under consideration by the War Department, action still pending. In the meantime they should be rigorously excluded from circulation."

Our records show that we have sent you the books in question in quantities as noted below.

		Copies
Kirby	Manual of Camouflage	
Kirby & Schoonmaker	Bombing and Grenade	
Kirby	Manual of Gas in Attack and Defense	

Request the cooperation of the military authorities in recovering and make a report to Headquarters when this is done. The above requires your immediate attention.

AMERICAN LIBRARY ASSOCIATION

LIBRARY WAR SERVICE.

AMERICAN LIBRARY ASSOCIATION

LIBRARY WAR SERVICE

Headquarters
Washington, D.C.

August 6, 1918.

To the Camp Librarian or Supervisor:

You are instructed by the War Department to send to headquarters, by parcel post insured, all copies in your camp library or in camp libraries under your supervision of Kirby "Manual of Camouflage" published by D. C. Appleton. Please remove all copies from the shelves and look up all charges for books in circulation and recall them immediately. Send without delay the copies you now have on hand, and the remainder as soon as returned. They will be forwarded to the Adjutant General's Office.

Also, acting under similar instructions, please withdraw all copies of Kirby & Schoonmaker "Manual of Bombing and Grenades" and Kirby "Manual of Gas in Attacks and Defense". These books are under consideration by the War Department, action still pending. In the meantime they should be rigorously excluded from circulation.

Our records show that we have sent you the books in question in quantities as noted below.

Copies

Kirby	Manual of Camouflage
Kirby & Schoonmaker	Bombing and Grenades
Kirby	Manual of Gas in Attack and Defense

Respect the cooperation of the military authorities in recovering and make a report to Headquarters when this is done. The above requires your immediate attention.

AMERICAN LIBRARY ASSOCIATION

LIBRARY WAR SERVICE.

Lib Sch
027.91
A512x

AMERICAN LIBRARY ASSOCIATION

LIBRARY WAR SERVICE

Headquarters
Washington, D.C.

August 2, 1918.

To Camp Librarians:

It has been decided to supply the following reference books to each Y.M.C.A. and K.of C. hut where the A.L.A. maintains a branch library:

Cassell — New French dictionary

Literary Digest — War Map

Everyman's Encyclopedia

A small atlas

Webster — Collegiate dictionary(to each hut which has not already received a copy from the shipments which the A.L.A. made last November).

It is possible that in some huts these books or other books giving the same information have already been supplied. In such cases, we do not wish, of course, to duplicate. Will you please find out and report soon the number of each of the above mentioned reference books, which you will need in order to supply the Y. and K. of C. huts in your camp. It is possible that your Y huts have already had inquiry from their headquarters and have made reports to us as to the French dictionary, the war map and the English dictionary, as we communicated with the National War Council of the Y.M.C.A. early in June in regard to supplying them. We wish, however, to check reports which we receive directly from Y. secretaries with reports from our Camp Librarians. When orders are placed for the reference books listed, they will be sent to the Camp Library to be distributed by the Camp Librarian to the branches.

An early response to this inquiry will be appreciated.

C.H. COMPTON
In Charge of Book Department.

027.91
A512x

Lib Sch

American Library Association

Library War Service

GENERAL DIRECTOR
HERBERT PUTNAM
LIBRARIAN OF CONGRESS

EXECUTIVE SECRETARY
GEORGE B. UTLEY

HEADQUARTERS
THE LIBRARY OF CONGRESS
WASHINGTON, D. C.

ASSISTANTS TO THE DIRECTOR
CARL H. MILAM
JOSEPH L. WHEELER

DISBURSING OFFICER
WILLIAM L. BROWN

August 6, 1918.

To the Commanding Officer,
Chaplain, or other
official in charge of the
Library:

We are sending you, under separate cover, a placard for use with books sent you by the American Library Association.

The announcement it bears will probably bring in requests for books which you do not have. If so, they may be referred to us with your recommendation.

We realize it is difficult to get photographs on vessels, but we shall be glad to add to our collection prints of photographs you may be able to take, of men using books.

Very truly yours,

MARION HUMBLE

In Charge of Publicity.

027.91
A512X

Lib Sch

American Library Association

Library War Service

GENERAL DIRECTOR
HERBERT PUTNAM
LIBRARIAN OF CONGRESS

EXECUTIVE SECRETARY
GEORGE B. UTLEY

HEADQUARTERS
THE LIBRARY OF CONGRESS
WASHINGTON, D. C.

ASSISTANTS TO THE DIRECTOR
CARL H. MILAM
JOSEPH L. WHEELER

DISBURSING OFFICER
WILLIAM L. BROWN

August 6, 1918.

To the Official in charge of the Library:

We are sending you, under separate cover , copies of our three new posters calling attention to reading facilities in camps and stations.

The large picture poster was drawn by C. B. Falls, the New York artist who drew our poster used in the campaign last fall, asking for books.

The placard "Why not advance" is designed for use over book cases or near the books themselves. The announcement it bears will probably bring in requests for books which you do not have. If so, they may be referred to us with your recommendation.

We are collecting photographs of men using books in various large and small army, navy and marine camps, posts and stations in this country and overseas. We shall be glad to have prints of any such photographs you are able to get.

Very truly yours,

MARION HUMBLE

In Charge of Publicity

PLEASE NOTE

On the placard, "A NECESSARY PART OF YOUR EQUIPMENT," the second line from the bottom is left blank so that you may insert location of your camp library.

D27.91
A512x

Lib Lab

AMERICAN LIBRARY ASSOCIATION

LIBRARY WAR SERVICE

Headquarters
Washington, D. C.

August 9, 1918.

To the Camp Librarian or Supervisor:

We have instructions from the War Department to remove from camp libraries the titles listed below. If any of them are in your camp library or in camp libraries under your supervision please see that all copies are removed from the shelves and recalled from circulation. Destroy all copies according to instructions previously given you.

It has recently been brought to our attention that pamphlets of a pacifist character are being sent to camp libraries. Please watch for them and destroy them.

Anonymous	Free speech and free press	
Mach, Edmund von	What Germany wants.	Little, Brown & Co.
MacManus, Seumas	Ireland's case	Irish Pub. Co. N. Y.
Nearing, Scott	Open letter to profiteers	
Wilson, Theodora Wilson	The last weapon	John C. Winston Co. N. Y.

American Library Association,

Library War Service.

AMERICAN LIBRARY ASSOCIATION

LIBRARY WAR SERVICE

Headquarters
The Library of Congress
Washington, D. C.

Oct. 9, 1918.

To the Camp Librarian addressed:

The following Night Letter was sent you last night. This is confirmatory of it.

Very truly yours,

M.G. WYER
Manager of Camp Libraries.

In many camps quarantine closes library building for reading purposes but not for circulation except to quarantined companies consult authorities concerning such orders for your camp staff should render all permissible service to quarantined companies supplying magazines and books to be destroyed or fumigated later keep all legitimate work going take every precaution giving best care to staff sick

LIBRARY WAR SERVICE
AMERICAN LIBRARY ASSOCIATION.

MGW/RLW

AMERICAN LIBRARY ASSOCIATION.

Library War Service.

Library of Congress, Washington, D.C.

October 11, 1918.

To Camp Librarians:

The attached Statement of Standards for Camp Library Cooperation in Y.M.C.A. Educational Work was submitted to the Educational Survey Committee of the Central Department Y.M.C.A. in July and has been included by the Committee in its report, which has now gone to all the Camps in the Central Department.

The same statement is being submitted to the Survey Committee of the Eastern Department, for its consideration.

Hence it is thought advisable to transmit the statement to our libraries, in order that they may be fully informed regarding what Y.M.C.A. educational secretaries may expect in the way of equipment and educational attitude.

Very sincerely yours,

W.H.KERR

Field Representative
In charge of Educational Cooperation.

Standards for Camp Library Cooperation in Y.M.C.A. Educational Work

1. Equipment: Adequate book and magazine material at each Y.M.C.A. Hut, for the following purposes:
a) General reference. (Note: A.L.A. Library War Service is now supplying the following to each YMCA hut where an ALA branch library is maintained: Webster, Collegiate dictionary; Cassell's New French Dictionary; War Map; Everyman's Encyclopedia; Atlas; subscriptions to 11 magazines, with binders to hold the current numbers).
b) Special reference and supplementary reading to parallel educational class work.
c) Technical material for individual use in army and navy specialized branches, or in preparation for after-the-war, or in vocational re-education, etc.
d) General recreative reading: poetry, travel, classics, fiction, etc.

2. Organization required at each YMCA branch library:
a) Simple, systematic organization of charging system, shelving (main collection on open shelves, reference and browsing collection perhaps in separate room), cataloging, listing, advertising (of books), etc., under the supervision of the camp library.
b) Records kept systematically and up to date.
c) Reports made regularly to camp library and YMCA hdq.
d) New and additional library material requisitioned promptly from camp library as needed.
e) Use of material not restricted by petty rules, fines, etc.

3. Educational attitude and practice in the use of books:
a) Does the Y educational secretary realize that there are active educational possibilities in books? Can he reach men through books? Does he use books, magazines, pictures, bulletin boards, etc., to help create the impersonal educational atmosphere that sets individuals to educating themselves?
b) Does the Y educational secretary cooperate with the camp librarian in a continuous educational survey of the educational-book needs of each unit, and do they adapt methods correspondingly?

10/11/18.

7.91
512X

AMERICAN LIBRARY ASSOCIATION
Library War service
Library of Congress, Washington, D.C.

To Camp Librarians,
Hospital Librarians,
and Others Interested:

October 11, 1918.

At your early convenience, will you please write me your impression regarding any or all of the following topics, which are mostly educational in their relations?

1. Library cooperative possibilities in teaching English to foreigners and illiterates. After the men learn to read, do they come to you for reading material?

2. Your experience or opinion in regard to reading courses for individuals, for groups, and as supplementing lectures? What possibilities in reading clubs, especially in military subjects such as machine guns, artillery, map-reading?

3. The study and reading habits and opportunities of YMCA and K of C secretaries: What do they want? What ought they to want? What do you do for them specially?

4. Educational book service to officers: What is possible?

5. Vocational training and re-education: What are the library responsibilities?

6. From your experience with hospital patients, what have you to suggest to YMCA educational and other workers?

7. Any experience or suggestions in regard to fireside talks, current events presentation and discussion, etc.?

8. Have you discovered any special library opportunities in the new scheme of Development Battalions (War Dept.General Orders #45. May 9, 1918. and Supplementary Circular, July 1918)?

9. Anything we can do to put more emphasis upon an aggressive win-the -war use of the camp libraries?

Interchange of opinion and experience along these lines will be quite worth while. Address me at Headquarters.

Very sincerely yours,

W. H. KERR

Field Representative,
In charge of Educational Cooperation.

k

Library of Congress, Washington, D.C.

To Camp Librarians,

[illegible]

1. [illegible]

2. You [illegible] for individuals, for groups, and as [illegible]

3. The study and reading habits and opportunities [illegible] interpretations; [illegible] What do you do for them?

4. Illustrations from service to [illegible]

5. [illegible] responsibilities?

6. [illegible]

7. [illegible]

8. Have you discovered any special library opportunities in the new Reconstruction and Development activities [illegible]

9. [illegible]

[illegible]

Very sincerely yours,

[illegible]

AMERICAN LIBRARY ASSOCIATION.

Library War Service.

Library of Congress, Washington, D.C.

October 11, 1918.

To Camp Librarians:

The attached Statement of Standards for Camp Library Cooperation in Y.M.C.A. Educational Work was submitted to the Educational Survey Committee of the Central Department Y.M.C.A. in July and has been included by the Committee in its report, which has now gone to all the Camps in the Central Department.

The same statement is being submitted to the Survey Committee of the Eastern Department, for its consideration.

Hence it is thought advisable to transmit the statement to our libraries, in order that they may be fully informed regarding what Y.M.C.A. educational secretaries may expect in the way of equipment and educational attitude.

Very sincerely yours,

W.H.KERR

Field Representative
In charge of Educational Cooperation.

Standards for Camp Library Cooperation in Y.M.C.A. Educational Work

1. Equipment: Adequate book and magazine material at each Y.M.C.A. Hut, for the following purposes:
a) General reference. (Note: A.L.A. Library War Service is now supplying the following to each YMCA hut where an ALA branch library is maintained: Webster, Collegiate dictionary; Cassell's New French Dictionary; War Map; Everyman's Encyclopedia; Atlas; subscriptions to 11 magazines, with binders to hold the current numbers).
b) Special reference and supplementary reading to parallel educational class work.
c) Technical material for individual use in army and navy specialized branches, or in preparation for after-the-war, or in vocational re-education, etc.
d) General recreative reading: poetry, travel, classics, fiction, etc.

2. Organization required at each YMCA branch library:
a) Simple, systematic organization of charging system, shelving (main collection on open shelves, reference and browsing collection perhaps in separate room), cataloging, listing, advertising (of books), etc., under the supervision of the camp library.
b) Records kept systematically and up to date.
c) Reports made regularly to camp library and YMCA hdq.
d) Now and additional library material requisitioned promptly from camp library as needed.
e) Use of material not restricted by petty rules, fines, etc.

3. Educational attitude and practice in the use of books:
a) Does the Y educational secretary realize that there are active educational possibilities in books? Can he reach men through books? Does he use books, magazines, pictures, bulletin boards, etc., to help create the impersonal educational atmosphere that sets individuals to educating themselves?
b) Does the Y educational secretary cooperate with the camp librarian in a continuous educational survey of the educational-book needs of each unit, and do they adapt methods correspondingly?

10/11/18.

027.91
4512X

OCT 22 '18

AMERICAN LIBRARY ASSOCIATION

LIBRARY WAR SERVICE

Headquarters
The Library of Congress
Washington, D.C.

October 15, 1918.

SPECIAL MEMORANDUM

To the Camp Librarian:

At the Saratoga Conference the need became apparent for a uniform system of securing reports from branches. Mr. William Orr, Associate Director of the Educational Bureau of the YMCA. National War Work Council was present and stated that he would instruct the YMCA. Secretaries to report on a standard form, if a satisfactory one could be devised. Suggestions as to such a form have been made by the YMCA. and the ALA. and the enclosed form has received the approval of Mr. Orr and of his successor, Mr. A.C. Trowbridge. Furthermore, it has been approved by th the Knights of Columbus Committee on War Activities.

Instructions concerning these report forms will be sent by each organization to its Secretaries in the various Camps.

We are sending you a supply of the forms for distribution to the branches in your Camp, Please explain the purpose of the form and request each branch to make use of it in submitting to the Camp Librarian a monthly report of the circulation of books.

You should also provide cards (ALA. Form 17) for the use of branches in recalling overdue books.

Very truly yours,

MALCOLM G. WYER,

Assistant to the Director.

AMERICAN LIBRARY ASSOCIATION

LIBRARY WAR SERVICE

Headquarters
The Library of Congress
Washington, D.C.

October 15, 1918.

SPECIAL MEMORANDUM

To the Camp Librarian:

At the Saratoga Conference the need became apparent for a uniform system of recording reports from branches. Mr. William Orr, Associate Director of the Educational Bureau of the YMCA, National War Work Council was present and stated that he would instruct the YMCA. Secretaries to report on a standard form, if a satisfactory one could be devised. Suggestions as to such a form have been made by the YMCA. and the ALA. and the enclosed form has received the approval of Mr. Orr and of his successor, Mr. A.C. Trowbridge. Furthermore, it has been approved by the Knights of Columbus Committee on War Activities.

Instructions concerning these report forms will be sent by each organization to its Secretaries in the various Camps.

We are sending you a supply of the forms for distribution to the branches in your Camp. Please explain the purpose of the form and request each branch to make use of it in submitting to the Camp Librarian a monthly report of the circulation of books.

You should also provide cards (ALA. Form 17) for the use of branches in recalling overdue books.

Very truly yours,

MALCOLM G. WYER,

Assistant to the Director.

AMERICAN LIBRARY ASSOCIATION — LIBRARY WAR SERVICE

Camp .....

Monthly Report—Library Service

Books Loaned From Y. M. C. A. / K. of C. Buildings

AT EACH BUILDING THE SECRETARY IS EXPECTED TO SEE THAT LIBRARY BOOKS ARE PROPERLY CHARGED, I. E. THAT THE BOOK CARD IS TAKEN OUT OF THE BOOK, THE SOLDIER'S NAME AND UNIT FILLED IN ON THE CARD, THE DATE STAMPED ON BOOK AND CARD, AND THE CARD FILED IN THE CARD TRAY SUPPLIED BY THE CAMP LIBRARY. AT THE END OF DAY, COUNT CARDS FOR BOOKS LOANED, AND ENTER TOTAL BELOW, CLASSIFYING AS BEST YOU CAN TO DETERMINE FUTURE PURCHASES. OVERDUE POSTAL CARDS ARE SUPPLIED TO BUILDING SECRETARIES AND THEY ARE EXPECTED TO MAIL THEM OUT FOR ALL OVERDUE BOOKS WITHIN THREE DAYS OF THE DATE THE BOOK BECOMES OVERDUE.

Month of..... Y. M. C. A. / K. of C. Building No.....

DAY	WAR AND MILITARY	HISTORY AND TRAVEL	SCIENCE MATHEMATICS TECHNICAL	FICTION	GENERAL	TOTAL
1						
2						
3						
4						
5						
6						
7						
8						
9						
10						
11						
12						
13						
14						
15						
16						
17						
18						
19						
20						
21						
22						
23						
24						
25						
26						
27						
28						
29						
30						
31						
TOTAL						

R7.91
512X

AMERICAN LIBRARY ASSOCIATION

LIBRARY WAR SERVICE

Headquarters
The Library of Congress
Washington, D.C.

August 28,1918.

To the Camp Librarian:

We need gift books by the thousands for shipment overseas. If you have more in your library than you are using right now, please report that fact to Headquarters in order that we may send you shipping instructions. We must not hold books in reserve for possible use in American camps four or five months from now when they are actually needed for shipment to France right now.

It will be an inconvenience to pack and ship these books from the camp libraries, but I am sure every camp librarian will be willing to take this trouble in order to meet the immediate needs.

Please be good enough to reply at once whether you have any books or not, so that we may know that this letter has not been overlooked.

Yours very truly,

CARL H. MILAM

Assistant to the Director.

27.91
51RX

AMERICAN LIBRARY ASSOCIATION

LIBRARY WAR SERVICE

Headquarters - Washington, D. C.

August 27, 1918.

To Camp Librarians:

Headquarters has had under advisement the preparation of slides for use wherever moving picture films are shown in camp. The following tentative wordings for slides are submitted as suggestions of what is in mind. Will you please look these over and select twelve that you think would be most effective in giving publicity to the library service in your camp? If you wish to suggest other slides, kindly do so. The slides are numbered and you can report to us the numbers you select.

When reports for all camps are received we will be able to make our decision in this matter.

Very truly yours,

M. W. MEYER,

In Charge of Publicity.

COME OVER TO THE CAMP LIBRARY

Walk right in
Step up to the Desk
Ask for what you want
Just sign your name and organization.

Free -
And it pays!

1

BORROW THE BRAINS

of the Best Writers
And Fighters

YOUR CAMP LIBRARY

Has the information
It is up to you!

2

We have obtained books
on request for soldiers on

forestry
leather trade
electric welding - and
43 other subjects.

What's yours? We'll get it for you at

YOUR CAMP LIBRARY

3

There are Thousands of Books

for all the men in camp

at the

CAMP LIBRARY

Just sign your name for the book you want and take it to your barracks

4

There is a quiet place
in this Camp where
you can read
and smoke

Meet your bunkie at the

CAMP LIBRARY

(American Library Association)

5

WHEN IN DOUBT -

take your question to the

CAMP LIBRARY

(The Camp Librarian really doesn't know everything - but he can find information about most things)

Try him!

6

Say to yourself:

"The Next Thing is to
Read a Good Book"

On the war, the job back hom ,
or a bully fine story.

See these booksin this room
Supplied by the American Library Association

7

General Pershing has asked for
50 tons of Books every month

Over 100,000 volumes of good books
are being sent each month to the
front over there by the A. L.A.

Hurry over - reading at the

Camp Library
American Library Association

8

To Advance { in winning the war
and in
the job back home

there are practical books
at the Camp Library
maintained by the American
Library Association. Try them!

9

"Wise men learn from the
experiences of others"

Read some of the
books in this room
supplied by the

American Library Association
Ask for those you need and want

10

What is your hobby?

Photography, baseball,
mechanics, music, or
just reading for fun?

The Camp Library is yours.
Branches in the
Y.M.C. A. and K. of C. huts

11

ATTENTION!

Take a shot at the books
on tactics and military training - and

ADVANCE!

(No charge)

AT THE CAMP LIBRARY

12

A BOOK FOR EVERY SOLDIER

The American Library Association maintains free library service at its Camp Library Building and at the Y.M.C.A. and K. of C. branches and other points in this camp.

13

Know a Little More
To Win the War

The average man learns from his own experience.
The wise man learns from the experience of others.

Camp Library books are yours for the borrowing.

14

What's easier than
rolling off a log?

Getting a book at the
Camp Library

No red tape. Just sign your name.

15

Open from
reveille to taps

YOUR CAMP LIBRARY

Ask the fellows who
have used it to advance

16

And magazines, newspapers and maps

On the war, your business and hobby

On tap - free to every man in camp

AT THE CAMP LIBRARY

17

Don't get rusty
on your trade

If you want to keep up-to-date
And know a little more
About that home job

Read some good books at the

CAMP LIBRARY

18

Even the mascot
knows a good thing
when he sees it

Library War Service
American Library Association

19

27.91
512X

A typical A.L.A.
Camp Library Building

(picture of building
to go here)
36 like this one now in use

Library War Service
American Library Association.

027.91
A517X
State Library School
Urbana.

AMERICAN LIBRARY ASSOCIATION

LIBRARY WAR SERVICE

Headquarters
The Library of Congress

November 20, 1918.

To the Camp Librarians:

A new embroidered insignia has been adopted for uniforms for Library War Service representatives. This should supercede the design now in use. A supply intended to be sufficient to meet the needs of men in uniform in your Camp is here enclosed. If supply is insufficient, state how many additional you need.

The old insignia should be removed from the uniform and this new circular device sewed to the left coat sleeve, three inches above the wrist opening, and to the pocket of each shirt.

New pins (an open book inscribed with letters "A.L.A.") are being made, and will be sent out shortly.

Very truly yours,

GEORGE B. UTLEY

Executive Secretary.

AMERICAN LIBRARY ASSOCIATION

LIBRARY WAR SERVICE

Headquarters
The Library of Congress
Washington, D.C.

November 15, 1918.

To the Camp Librarian:

During the next few weeks we hope to issue, with full cooperation of the Post Office Department, some press bulletins, calling for more and better Burleson Magazines for the camps.

Please tell us

1. Whether your camp needs more magazines.
2. Why you need them and how they are used.
3. What magazines are most needed.

State your answers, please, in such a way that your letter or parts of it can be quoted in the press bulletins, as showing what the camp librarians themselves are actually calling for.

We shall also welcome any suggestions as to methods we could use in stimulating the contribution of magazines through the Post Office.

Yours very truly,

M. G. WYER,

Assistant to the Director.

American Library Association

Library War Service

ERAL DIRECTOR
BERT PUTNAM
IAN OF CONGRESS

UTIVE SECRETARY
RGE B. UTLEY

HEADQUARTERS
THE LIBRARY OF CONGRESS
WASHINGTON, D. C.

ASSISTANTS TO THE DIRECTOR
CARL H. MILAM
MALCOLM G. WYER

DISBURSING OFFICER
WILLIAM L. BROWN

November 15, 1918.

To the Librarian:

If you receive foreign language magazines and newspapers, which you can ship (after they have been used in your reading room) to camp and station libraries, please indicate below the approximate number (ofpieces not titles) in each language, that would be available each month.

Yours very truly,

CARL H. MILAM

Assistant to the Director.

Arabic	Hungarian	Slovak . . . . .
Armenian	Italian	Slovenian . . . . .
Bohemian	Lithuanian . . .	Spanish . . . . .
Croatian	Norwegian . . .	Swedish . . . . .
Bulgarian . . .	Polish	Syrian . . . . .
Dutch	Portuguese . . .	Ukranian . . . . .
French	Russian	Yiddish . . . . .
Greek (Modern) ..	Ruthenian . . .	
Finnish	Serbian.	

Please return promptly to A. L. A. War Service Headquarters.

AMERICAN LIBRARY ASSOCIATION

LIBRARY WAR SERVICE

Headquarters
The Library of Congress
Washington, D.C.

November 15, 1918.

To the Camp Librarian:

Many large public libraries receive magazines and newspapers in foreign languages, which are kept on the reading tables of the libraries for a short time and then discarded.

Many of these periodicals can probably be made available to the camp libraries if the Camp Librarians can use them to advantage several weeks after publication.

Please indicate on the enclosed sheet, approximately how many pieces in each language you could use to advantage each month, in your camp.

It is suggested that you call our attention, in some special way, to your needs for reading matter in languages in which we have been unable to supply a fairly adequate collection of books.

Yours very truly,

M. G. WYER,

Assistant to the Director.

AMERICAN LIBRARY ASSOCIATION. LIBRARY WAR SERVICE.

Headquarters: Congressional Library, Washington, D.C.

Camp _____ Library.

Could use to advantage every month, the number of foreign language magazines and newspapers (pieces not titles) indicated below:

Arabic .....

Armenian .....

Bohemian .....

Bulgarian .....

Croatian .....

Dutch .....

Finnish .....

French .....

Greek-Modern .....

Hungarian .....

Italian .....

Lithuanian .....

Norwegian .....

Polish .....

Portuguese .....

Russian .....

Ruthenian .....

Serbian .....

Slovak .....

Slovenian .....

Spanish .....

Swedish .....

Syrian .....

Ukranian .....

Yiddish .....

1-15-18.

AMERICAN LIBRARY ASSOCIATION

LIBRARY WAR SERVICE

Headquarters
The Library of Congress
Washington, D.C.

November 16, 1918.

To the Camp Librarian and Supervisors:

Armistice and peace conditions will bring new book demands in our Library War Service. The incentive for intensive military training is removed and the men are thinking more and more of their work and business after being mustered out. Thus the call for books on military tactics and technique will lessen, while that for trades, business, vocations and education will increase.

Our efforts thus far have been devoted chiefly to furnishing books to make better soldiers, sailors and marines. We now have the still greater opportunity of supplying the incentive and the information by which our soldiers, sailors and marines may become more capable civilians. The men must realize now, as never before, the advantages of education and the value of books in supplying it. The right books must be ready for the men, whatever they may wish to study -"from cooking to carpentry, from electricity to economics, from tailoring to telegraphy from civics to cobbling, from art to agriculture."

Headquarters has made plans to supply, to a reasonable extent, the books needed to meet the new demands, keeping in mind the fact that most Camps and Stations probably will be decreasing constantly in size. We will depend on you to inform us of the legitimate needs of your Camp, or Camps, for books of this kind.

The unsettled conditions will call for the utmost vigilance on the part of the Librarian or Supervisor. Unused books should be reported promptly to Headquarters, that they may be made available where they are needed. The books in discontinued branches and stations must be cared for at once.

The A. L. A. representatives have a new responsibility and a new opportunity to make the Camp Library Service fit the changing needs of the men.

Very truly yours,

HERBERT PUTNAM

GENERAL DIRECTOR.

027.91
A512x

AMERICAN LIBRARY ASSOCIATION

LIBRARY WAR SERVICE

Headquarters
The Library of Congress
Washington, D.C.

November 26, 1918.

TO THE CAMP LIBRARIAN:

This letter details a plan for pushing vocational study among the men in camp. The plan as conceived is based on the conviction that the providing of books on vocational subjects is now the greatest opportunity of the camp library. It takes for granted a rapidly transient population, one which will have little interest in the camp or its institutions. More than ordinary effort will be necessary to reach the man who knows he is on his way home. The library must convince him that it is now able to offer a service more lasting in value than that which featured the science of warfare.

The task now confronting the camp library is constructive to the highest degree. The man who learns now that the camp library is able to help him back to his work will continue to rely on the library as an institution after his return to civil life.

You are asked to give your close attention to the details here set forth.

BOOKS ON VOCATIONS

For each vocation in an initial group of twenty, an average of six titles will be provided for your camp. If some of the books included in the selected lists are already on your shelves, you will receive only those which are not at hand. You are assured of having available for use every title for which our campaign definitely creates a demand. The books ordered for camps will begin to reach those at points near at hand approximately December 1st.

BOOK LISTS

We are sending you a series of vocational book lists in book mark form.

(Vocational List No. 1.) The first slip will reach you about December 1. It calls attention to the opportunities for vocational study at the camp library, and particularly those occupations in which special demand will rule after the war. Your aim in giving this distribution should be to get it to every man in camp. It should go into every book charged, especially in the branches, and should be posted on every bulletin board. The initial supply going forward to you is 5,000. This number is placed as the minimum; you will surely be able to distribute this many. More will be sent you on definite request.

(2) A second slip deals with the choice of a vocation, and lists the books in the library which will guide a man in picking out his work. There is a brief annotation for each book.

(3-20) Each of the vocations is similarly treated in a special slip.

These book lists will reach you in installments as rapidly as the printer can get them out. If the list should reach you before the books on that especial vocation have arrived, hold the list in reserve until the books come.

The number provided of each book list will be based on the relative interest in the vocation, in our judgment. For reorders, we shall want to be guided by definite information from you as to the number required.

RACKS

Every man with camp library experience who has been available for consultation has been asked for an opinion on the best way of distributing these lists. Each has declared a rack necessary. If these book lists are found in every branch, ranged in orderly fashion in a rack, like a time table rack, the man interested in vocational reading can pick out the lists which appeal to him without disturbing the others. You will also be able to note at a glance in what respect the rack needs replenishing.

The general opinion seems to be that these twenty or more book lists, if merely placed in piles on a table in a branch, would soon become hopelessly mixed up, and in a day or two would be swept off into a wastebasket by the secretary as rubbish.

Herewith we are sending you two designs for racks. Each is simple in construction, although you will probably find the one designated "A" the easier to make in quantity. This can be assembled in three parts; two pieces 3 x 30, three pieces 3 x 25, and six or nine strips of beading or the like, about 30¾ inches long, allowing 3/8 inch thickness for the wood. Cheap construction will answer.

Please get these racks under way at once. Have them ready for the vocational booklists when they arrive. The rack here recommended will hold twenty, which is probably as many as you will care to display at any one time. A rack should be placed in every branch and in other places where men congregate, if you are able to provide them. We must be sure that every man in camp will notice at least one of the racks, no matter if the camp is only a stopping place for him on the way home. He must realize that the camp library right now is the best place for him to spend his time, no matter how brief it is.

PLACARDS

To go over the racks, and to be posted elsewhere throughout the camp, Headquarters will send you a stock of placards, calling attention to the camp library as a place to get posted on the home job.

SLIDES Seven special lantern slides, emphasizing the vocational study idea, have been sent to you.

TRENCH AND CAMP If the wording of the booklists and the style of the annotations suit you, publish them as they are, as your own release, without giving credit to Headquarters. Please make every use you can of the camp paper to further the campaign.

SUGGESTIONS FOR FUTURE EDITIONS This method of pushing vocational study has been worked out rapidly, on the conviction that some provision must be made at once to meet changed conditions. Your experience may prove the plan at fault in certain respects; we shall welcome your suggestions and criticism. If it brings results, we shall assuredly want to continue it, with improvements and elaborations.

We ask you to give your best efforts to carrying out the plan in detail. It represents a considerable effort on the part of Headquarters to meet the need of the moment; the outlay involved is large, and it would be a grave mistake not to exploit the plan to its utmost possibilities.

The plan should meet the approval and gain the active cooperation of the Y. M. C. A. educational secretary.

Very truly,

HERBERT PUTNAM,

General Director.

2 pcs 3"x25"x3/8"
3 " 3"x30"x3/8
9 Strips heading :
30¾" & (thickness
backing of cardboard

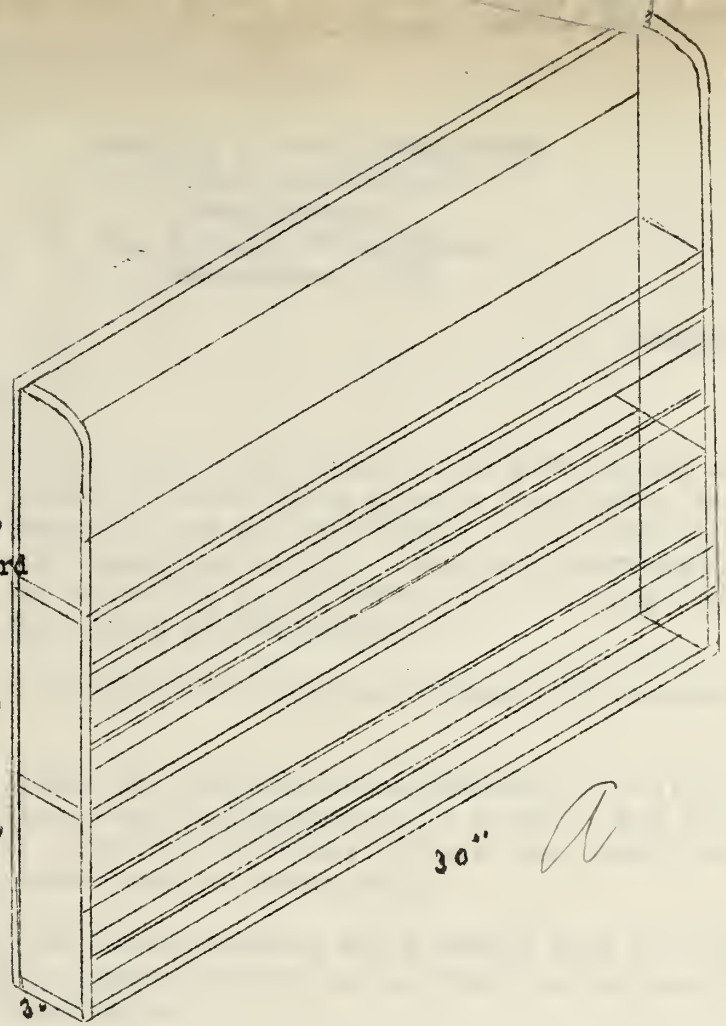

a

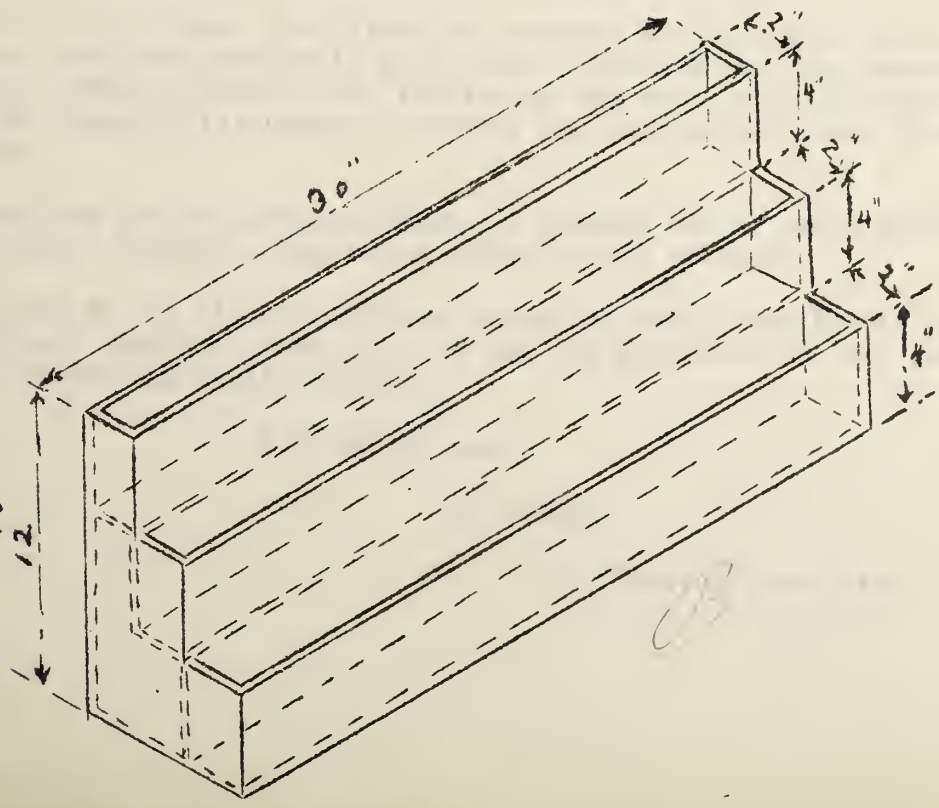

b

Cases suggested for holding
A. L. A. Vocational Leaflets.

AMERICAN LIBRARY ASSOCIATION
Library War Service
Headquarters
The Library of Congress,
Washington D.C.

January 8, 1919.

To the Camp Librarian:

We are anxious to secure the detail of an advertising man in every camp to carry out an intensive advertising program for pushing vocational study. The Morale Branch of the War Department is interested in the provisions we are making for vocational study. They are instructing the Morale Officer in each camp to assist the camp librarian in securing such a detail. We enclose a copy of the letter of instruction.

Please get in touch with the Morale Officer with respect to this special proposition.

The Morale Branch has advised us that through the Morale Officer mention of the camp library and the facilities it provides can be included in the "Day's Orders". Through the Morale Officer also weekly book lists and other advertising matter can be mimeographed.

In one camp, the Morale Officer has promised that the camp librarian, or some other A.L.A. representative can address the men briefly whenever they are assembled for lectures.

This personal method of advertising has never been used enough. It is more effective than any other.

In the same camp, the librarian, through the cooperation of the Morale Officer, has been enabled to place large signs at the camp entrances and at the main intersections of the streets in the camp, pointing out the location of the library, its hours of service and the sort of help it can give to the men.

Doubtless you are employing some or perhaps all of these measures. At any rate, every possible advertising medium should be used.

We must do our utmost right now toward library extension in the camp. We must "sell" our service to the men---to all the population of the camp and not only to a restricted reading public.

Very truly yours,

M.W.MEYER

In charge of publicity.

January 6, 1919

From: Chief, Morale Branch.

To: Morale Officer, through Commanding Officer (all camps and hospitals)

Subject: American Library Association.

1. Attached, for your interest and information, is a statement of the functions of the American Library Association.

2. This office feels that the value of books, for maintaining the morale of the soldier and preparing him for return to civilian life, can hardly be overstated.

3. It is the desire of the American Library Association that Camp and Hospital libraries be used more extensively than in the past. As a means toward this end the American Library Association has expressed the desire for the services of a man with advertising experience to be assigned to each camp and hospital librarian, to assist in making library facilities more widely known.

4. It is suggested that if possible arrangements be made to have such a man assist the librarian.

E.L.Munson,
Brigadier General, General Staff.

027.91
A512X

Univ. of Ill. Library School
Urbana.

AMERICAN LIBRARY ASSOCIATION

LIBRARY WAR SERVICE

Headquarters
The Library of Congress

December 5, 1918.

To the Camp Librarian:

The demobilization of our armed forces has begun and will continue at a rapid rate. This will involve (eventually) a lessening of the demand for books and service in many of our Camp Libraries, and will call for the constant readjustment of personnel and equipment in a corresponding degree.

Please fill out and return to us, immediately, the enclosed special inventory sheet in order that we may have before us, in convenient form, facts about the physical equipment of your camp library, for use in connection with the changing conditions. This report should show all equipment which would be available for use in the event of a transfer of the library to another camp.

It is not known, so far, precisely which of the camps will be lessened in activity, or abandoned, or which of them will be increased in importance. Only the actual work of demobilization will show in which class a particular camp will come.

Yours very truly,

MALCOLM G. WYER,

Assistant to the Director.

AMERICAN LIBRARY ASSOCIATION

LIBRARY WAR SERVICE

Headquarters
The Library of Congress.

SPECIAL INVENTORY.

The following Inventory Statement shows the physical equipment of the Camp Library at Camp _____

December _____ 1918. _____
Librarian.

1. BOOKS: (Estimate pamphlets separately)

(a) In main library

(b) In branches and in transit between branches

(c) Gift or purchase books not yet on shelves

(d) Books unsuitable for circulation and withdrawn

(1): by reason of subject

(2): by reason of condition

Indicate general nature of books; they may be useful elsewhere.

N.B. If your library is especially heavy in any line, please indicate that fact.

Dec. 5, 1918.

SPECIAL INVENTORY, cont'd.

2. FURNITURE: A - LIBRARY

(1) Movable bookcases

(2) Desks: Typewriter; Single pedestal; Double pedestal

(3) Book trucks

(4) Filing cabinets (Letter or cap size), metal or wood

(5) Card cabinets (size and make)

(6) Charging trays at headquarters or at branches

(7) Typewriters (give make)

(8) Branch book boxes

(9) Newspaper files

Dec. 5, 1918.

SPECIAL INVENTORY, cont'd.

2. FURNITURE A - LIBRARY -- Continued

(10) Periodical binders

(11) Bulletin boards, magazine racks, newspaper racks

(12) Tables

(13) Chairs:

(1) For use of readers

(2) Typewriter chairs

(3) Office Chairs

B - BEDROOM EQUIPMENT

Beds, bedding, floor covering, etc.

Dec. [illegible], [illegible].

SPECIAL INVENTORY, cont'd.

3. AUTOMOBILES:

(a) Trucks (state if with special book body)

(b) Roadsters (state if with delivery body)

(c) Touring cars

(d) Fire Extinguishers on autos or in buildings

PYRENE: 3-gal. type.

4. BUILDING ACCESSORIES AND ITEMS OF EQUIPMENT NOT SUGGESTED ABOVE:

(a) Ceiling fans (give size, make, etc.)

(b) Desk fans " " " "

(c) Electric light fixtures

(d) Stoves, etc.

Dec. 5, 1918.

American Library Association

Library War Service

GENERAL DIRECTOR
HERBERT PUTNAM
LIBRARIAN OF CONGRESS

EXECUTIVE SECRETARY
GEORGE B. UTLEY

DISBURSING OFFICER
WILLIAM L. BROWN

HEADQUARTERS
THE LIBRARY OF CONGRESS
WASHINGTON, D. C.

ASSISTANT [GENERAL] DIRECTOR
CARL H. MILAM

ASSISTANTS TO THE DIRECTOR
MALCOLM G. WYER
IN CHARGE OF LARGE CAMPS
THERESA HITCHLER
IN CHARGE OF SMALL CAMPS
CAROLINE WEBSTER
IN CHARGE OF HOSPITAL LIBRARIES
F. K. W. DRURY
IN CHARGE OF BOOK DEPARTMENT
ANNA G. HUBBARD
IN CHARGE OF ORDER DEPARTMENT

December 11, 1918.

To the Camp Librarian:

At the present time the Camp Library has a greater opportunity than ever as one of the important agencies for maintaining the morale of the Army.

The loss of the incentive for military training, the discomforts of camp life, which are felt more keenly since they no longer seem necessary, the restlessness of the ambitious who desire to return to their civil duties without delay, and the general unsettled condition of the entire camp all contribute to a state of affairs which has brought a closer cooperation of the military authorities with the welfare agencies.

The Morale Officers who have been appointed at all the Camps are devoting special attention to the work of the Library in these serious times.

At one of the Camps recently, after a careful survey of the Library facilities, the Morale Officer recommended action necessary to make our work more effective. He emphasized particularly the importance of having strong well kept branches and of adequate publicity about the Camp. His suggested program was practically what has been stressed by Headquarters for months and he pledged active aid and influence in securing more effective branches.

Many Librarians have reported the interest and assistance of the Morale Officers and all of you who are not in touch with them are directed to lose no time in enlisting their assistance.

You are further directed to establish relations with the troops of the regular army. Call on the Chaplain and Commanding Officers of all regular Army units within two days of their arrival in Camp. They will appreciate it and will give better cooperation.

Make a greater effort than ever to keep your Library the cleanest, neatest and most attractive building in Camp.

Very truly yours,

MALCOLM G. WYER,

Assistant to the Director.

027.91
A512X
State Library School
Urbana.

AMERICAN LIBRARY ASSOCIATION.

Library War Service.

Headquarters
The Library of Congress
Washington, D.C.

December 20, 1918.

To The Camp Librarian:

We have ordered from the publishers three to five copies of each title of a selected list of the most popular fiction covering the following authors :

Adams	Farnol	London	Sinclair
Beach	Gibbs	Mulford	Tarkington
Bindloss	Grey, Zane	Oppenheim	Twain
Bôwer	Knibbs	Parker	White, S.E.
Burroughs	Kyne	Rinehart	White, W.A.
Connelly	Lincoln	Seltzer	Wilson
		Service	Wright

These you may use in the Main Library or distribute to branches as you believe to be best. The Base Hospitals have been given an additional supply of their own. We will supply you with a reasonable number of further titles if you will requisition for them.

Cordially yours,

MALCOLM G. WYER.

Assistant to the Director.

027.91
A512X

Illinois
ry School.

American Library Association

Library War Service

Headquarters
The Library of Congress

December 5,1918.

To the Camp Librarian:

You will receive several copies of Jowett, "The Preacher", among the vocational books ordered for you.

These are especially for the use of the Y.M.C.A. Secretaries in connection with their vocational work campaign. Please deliver these to the Y.M.C.A. branches without delay. If you have more copies than are needed, return the extra ones to the New York Dispatch Office.

This book is included on the printed list relating to professions.

At one Camp the Y.M.C.A. has placed the entire time of an Educational Secretary at the disposal of the Camp Librarian to cooperate in the use of vocational books.

Very truly yours,

MALCOLM G. WYER

Assistant to the Director

AMERICAN LIBRARY ASSOCIATION

LIBRARY WAR SERVICE

Headquarters
The Library of Congress
Washington, D.C.

December 3, 1918.

To the Camp Librarian:

Announcement has been made by the War Department that the tent camps will be abandoned as soon as practicable. It is uncertain how soon this will be, but probably the time will vary in different Camps.

At all such Camps, however, the number of men will be decreasing constantly and branches will be discontinued from time to time.

In the plan of demobilization it is evident that the injured and convalescent men are to be first returned from the other side. This means that the debarkation hospitals must be filled with books. The Dispatch Offices, from which these points normally would be supplied, have no books. Dispatch Office Agents declare themselves helpless in the face of the demand.

It is evident, therefore, that the book supply is still insufficient and we must not allow the books in Camp to be scattered or wasted.

The disposition of books must have the first attention of the Librarian. He should see that books loaned are returned to the Camp Library, or to branches. The military authirities will assist in this.

As fast as branches are closed, the books should be sorted over and then should be packed ready for shipment. Fiction and non-fiction should be packed in separate boxes, and it would be well to mark on the outside of each box "fiction" or, "non-fiction", and the number of volumes. Pack only books in first class condition.

Notify us every few days how many boxes you have ready for shipment, so that we can send shipping directions without delay.

You have received the blank for the inventory of your equipment. This should be filled out and returned at once. Instructions for the disposition of such equipment and supplies will be sent you in due time.

Very truly yours,

MALCOLM G. WYER

Assistant to the Director.

027.91
A512Y

American Library Association

Library War Service

GENERAL DIRECTOR
HERBERT PUTNAM
LIBRARIAN OF CONGRESS

EXECUTIVE SECRETARY
GEORGE B. UTLEY

ASSISTANTS TO THE DIRECTOR
CARL H. MILAM
MALCOLM G. WYER

DISBURSING OFFICER
WILLIAM L. BROWN

HEADQUARTERS
THE LIBRARY OF CONGRESS
WASHINGTON, D. C.

December 3, 1918.

To the Camp Librarian:

You have already been informed of our efforts to provide Camp Libraries with books on civilian work and vocations. Books are now reaching you and you have received the letter outlining the use of book lists, lantern slides and placards supplied as an aid to publicity.

We are sending you as rapidly as they are printed a supply of book lists on the subjects listed on the enclosed sheet. More lists may be obtained on request.

We suggest that you do not use the lists until the books are received. We cannot, of course, supply enough books for you to place a complete set in each of the branches. We suggest that you place in each branch, however, a set of books on one vocation with a placard explaining that this is only a sample of what may be found in the Camp Library.

The supply probably will not even meet the demands at the Camp Library. It may be advisable to limit circulation to a day or two and to establish a system of reserves.

Very truly yours,

MALCOLM G. WYER

Assistant to the Director.

Vocation List Bookmarks (First 20)

Your Job at Home (General list of vocations)

Where do we go from Here (Books on vocations)

Lure of the Land (Farming)

Carpentry

Seamanship

Railroad Engineering

Steam Engineering

Business

Advertising and Salesmanship

Bookkeeping and Accounting

Machine Shop Work

Automobiles

Journalism

Sheet Metal Work

Electrical Work

Rapid Communication: Telephony, telegraphy, wireless.

Banking

Foreign Trade

Drafting

Civil Service.

11-27-18.

OR7.91
A517x

AMERICAN LIBRARY ASSOCIATION

LIBRARY WAR SERVICE
Headquarters
The Library of Congress, Washington, D.C.

March 18, 1919.

To the Camp Librarian:

We are reprinting for you here portions of a letter about "Your Job Back Home", from a camp librarian. Inasmuch as Headquarters has made no specific recommendation as to the method of putting the book into use, the letter may prove helpful to you.

" Our advance copy of "Your Job Back Home" has come. It strikes me as a splendid idea, most effectively worked out.

Our preliminary plans for getting these into use would include placing at least one prominently in each branch agency, one with the U.S.Employment Service to whom men wanting jobs come, one with the Morale Officer, one at the Headquarters of each Welfare Organization, and several available for circulation from the central building.

Those in branches and on tables in our main building I would plan to have used only in the building and to carry a cover-label something as follows:

This May be Vital
To You

NOW

See Especially Pages on

_____

_____

_____

Do not remove from building.

Other plans for the use of this booklet may be suggested by the Morale Officer."

We shall be grateful if you will give us your own suggestions on the subject, and also your experience in using the book, so that we may pass them on.

Very truly yours,

M. W. MEYER

In Charge of Publicity.

AMERICAN LIBRARY ASSOCIATION

LIBRARY WAR SERVICE

Washington, D.C.

28 March 1919.

TO THE CAMP LIBRARIANS:

Subject: ITEMS ORDERED FOR CAMP LIBRARIES.

We are having sent to you the following:

From New York Dispatch Office:

1 set of volumes in Missionary Educational Movement Library on the Negro as follows:

Baker:	Following the color line
Dunbar:	Lyrics of lowly life
Merriam:	The negro and the nation
Murphy:	The present south
Naylor:	Day break in the dark continent
Page:	The negro: The southerner's problem
Washington:	Up from slavery

From American Association for International Conciliation

3 bulletins on the League of Nations, one giving the text as proposed in February, 1919.

The text of the proposed constitution is also available in Senate Document #389 of 65th Congress, 3rd Session, being presented and ordered printed the 15th of February, 1919, by Senator Lodge.

It has been printed also by the World Peace Foundation, 40 Mount Vernon Street, Boston, Mass. 3¢

From Abercrombie & Fitch Company

General catalog of sport goods.

Very cordially yours,

F. K. W. DRURY

In Charge of Book Department.

FKWD/C

State Library School,
021.91
A512X

AMERICAN LIBRARY ASSOCIATION

LIBRARY WAR SERVICE

Headquarters
Library of Congress
Washington, D.C.

To War Camp Community Service Organizers:

We are sending you a sample set of 24 vocational book lists. These we are willing to supply, at our expense, in any quantity you request, for distribution to discharged soldiers, sailors and marines, and also to men still in the service. Through the distribution of these lists we hope that you will be able to acquaint men with the books on trades and vocations which libraries everywhere have to offer.

Please fill out the enclosed order blank and send it to your Division Secretary at 1 Madison Avenue, New York City, by whom your request will be forwarded to us.

This matter was referred to in a bulletin sent out on February 15th by your New York office, stating that the American Library Association would supply sample sets of the lists and asking you to requisition the number you were able to use.

We shall greatly appreciate your cooperation.

Very truly yours,

M.W. MEYER

In charge of publicity.

February 25, 1919.

M/o

AMERICAN LIBRARY ASSOCIATION

LIBRARY WAR SERVICE

Washington, D.C.

15 February 1919.

TO THE CAMP LIBRARIAN:

The following are a few titles of law books for which you may requisition if you need them to supplement what you may have already.

If you need more technical ones, or indeed professional books of a highly technical character in any line, please try to borrow from a nearby library.

Law book suggestions for camp libraries

	Cyclopaedic Law Dictionary	Callaghan	$5.00
Burdick, Wm. L.	Law of Real Property	West	3.75
Burdick, F.M.	Law of Torts	Banks	3.50
Clark, Wm. L.	Contracts	West	3.75
Clark, Wm. L.	Criminal Law	West	3.75
Robinson, Wm. C.	Elementary Law	Little	3 50

Yours very cordially,

F. K. W. DRURY

In Charge of the Book Department.

027.91
A512X

INFORMATION CONCERNING

American Library Association

(A.L.A.) Camp Libraries

For All Welfare Organizations

The American Library Association (A.L.A)

The American Library Association (A.L.A.) is one of the seven civilian organizations engaged in welfare work among our soldiers, sailors, and marines, operating under the general direction of the Army and Navy Commissions on Training Camp Activities. The A.L.A. is charged with the responsibility of supplying books and magazines for all America's fighting forces. The A.L.A. works in close and complete cooperation with all the other six organizations; also with Chaplains and the Red Cross.

The Branch Library

THE A.L.A. PROVIDES FOR BRANCH LIBRARIES (whether in Y.M.C.A., K. of C. or other welfare buildings),

Books. A collection of books suited to the demands of each building. The books are all fitted with book cards, adapted for the simplest possible system of recording loans. A list of books supplied is sent out with the books.

Magazines. Subscription to a standard set of eleven magazines, and magazine binders to hold them.

Trays for filing the book cards, dated guide cards, rubber dating stamp and daily circulation sheet. This circulation sheet has the approval of Y.M.C.A. headquarters. It will be sufficient to record the statistics of fiction and non-fiction.

Postal cards on which to notify men who have failed to return books. Notices should be sent out promptly.

Consult the Camp Librarian about overdue books as he may be able to secure assistance through the Morale Officer, General Orders, etc. No fines should be charged.

Regular visits from the Camp Librarian or member of Library staff to give suggestions concerning making the Library best serve the boys.

Signs near the Library,

1 Requesting men taking out a book to have it recorded at desk.

2 Requesting men returning a book to leave it at desk.

3 Calling attention to the Camp Library with its collection of books on all subjects.

4 An enamel metal sign stating that this branch is a War Service Library of the American Library Association. As occasion arises the building secretaries should state that the branch collection is a part of the A.L.A. Library service.

THE Y.M.C.A., K. OF C., OR OTHER WELFARE ORGANIZATION

Provides shelving for the books, where the men will have access to them—**not behind the desk.**

Designates a secretary, who is responsible for the care of the Library. This secretary should see that every member of the building staff understands the process of charging books, and knows the location of the Camp Library.

The secretary should confer with the Camp Librarian frequently and get advice and suggestion on Library matters.

The secretaries should refer special requests for books not in the Branch Library to the Camp Library. If impossible for the inquirer to call there, the book usually can be sent to the branch.

Frequent attention should be given the Library shelves; five minutes three times a day will keep the shelves attractive and yourself informed regarding their condition and needs.

Special Features

VOCATIONAL BOOKS.

The Camp Library is equipped with a large number of books on trades, business and vocations of all kinds. Some of these may be available for use at the branch, but the demand at the Camp Library prevents sending many to the branches.

Vocational book lists are provided all branches and the Camp Librarian furnishes special racks for these lists, to be displayed in a prominent place.

A book "Your Job Back Home" is provided every branch for display and use at the desk.

Posters and lantern slides for calling attention to these vocational books are supplied all branches.

Because of the great interest in employment, trades, and vocations for soldiers, all secretaries should inform themselves of the supply of vocational books at the Camp Library.

EDUCATIONAL PROGRAM

The Camp Library is receiving books for reference and supplementary reading on subjects covered in hospitals and convalescent centers, in Y.M.C.A. or other educational work, in special lectures, and in citizenship and Americanization lectures and courses given by the Y.M.C.A. or other organizations.

NOTE

In small Camps, Stations or Hospitals where there is no Camp Library and no Camp Librarian, a supervisor, hospital librarian or A.L.A. representative acts in similar capacity instead.

Requests of all kinds should go to the supervisor for approval and recommendation to A.L.A. Headquarters.

AMERICAN LIBRARY ASSOCIATION

LIBRARY WAR SERVICE

Headquarters
The Library of Congress, Washington, D.C.

April 15, 1919.

SPECIAL MEMORANDUM

SUBJECT: Information concerning care of branch libraries.

To the Camp Librarian:

We have just sent you copies of "Information Concerning American Library Association (A.L.A.) Camp Libraries, For All Welfare Organizations".

We have found that in most Camps the Librarian has difficulty in keeping the constantly changing Secretaries of the Y.M.C.A. and K. of C. informed concerning the main facts of the Camp Library service.

We have, therefore, prepared this little circular which outlines concisely the work of the Camp Library, emphasizing what the Library does for the branch and what the Library expects of the organization maintaining a branch.

You should so arrange the distribution of the circular as to make certain that every secretary of each organization maintaining a branch Library will be familiar with the contents of the circular.

Very truly yours,

MALCOLM G. WYER

Assistant to the Director.

American Library Association

Library War Service

GENERAL DIRECTOR
HERBERT PUTNAM
LIBRARIAN OF CONGRESS

EXECUTIVE SECRETARY
GEORGE B. UTLEY

HEADQUARTERS
THE LIBRARY OF CONGRESS
WASHINGTON, D. C.

ASSISTANTS TO THE DIRECTOR
CARL H. MILAM
JOSEPH L. WHEELER

DISBURSING OFFICER
WILLIAM L. BROWN

March 15, 1918.

To the Camp Librarian:

We are sending the enclosed letter and circular to all army and navy hospitals, except to the base and general hospitals at camps where we have a librarian.

We are sending this to you with the request that you take up with the Medical Officer in Command of the hospital the question of further development of library work at the hospital and the possibility of a trained library woman being attached to the hospital staff.

The War Department contemplates increasing, and in many cases doubling, the present bed capacity of the base hospitals. (We have the total authorized bed capacity of those hospitals, in case the figures are not available to the hospital).

The Red Cross is putting up convalescent houses at all base hospitals, and has assured us there will be sufficient shelving in the assembly room to take care of the books we supply. We feel that it is important not only to have shelves in the assembly room, but would like to have the use of a room from which the library could be administered. In some cases it will be advisable to have a trained library woman attached to the hospital staff. If this is advisable in your camp and you would like to have a woman for this position, please report whether she could live at the hospital.

We are taking up with the Red Cross Headquarters the question of using one of their rooms, but we feel it advisable that you discuss this also with the Red Cross Representative at the hospital.

We are sending you fifty scrap books which we would like to have you take to the Base Hospital and report to us whether they are used and enjoyed by the men.

We are enclosing two copies of the questionnaire. Will you please return one to us with your recommendations and keep the other for your own files.

Yours very truly,

For the General Director.

CW:JK
40

American Library Association

Library War Service

GENERAL DIRECTOR
HERBERT PUTNAM
LIBRARIAN OF CONGRESS

EXECUTIVE SECRETARY
GEORGE B. UTLEY

HEADQUARTERS
THE LIBRARY OF CONGRESS
WASHINGTON, D. C.

ASSISTANTS TO THE DIRECTOR
CARL H. MILAM
JOSEPH L. WHEELER

DISBURSING OFFICER
WILLIAM L. BROWN

March 14, 1918.

Medical Officer in Command:

The American Library Association has been requested by the War Department's Commission on Training Camp Activities to provide reading material for our men "everywhere."

Gift books, carefully sorted, are available in large quantities to meet the needs for fiction and general literature. A Fund is also available which makes possible the purchase of technical books, war books, easy language for foreigners, etc., in small quantities. Magazine needs are usually met by gifts from nearby public libraries, or by the supply from the Post Office.

The opportunity for reading and study is perhaps greater in a hospital than anywhere. In order that we may supply your needs, we are sending you the enclosed questionnaire, with the request that you fill it out and return to us.

Any suggestions which you care to make, which you feel will lead to more effective service, will be appreciated.

Yours very truly,

Caroline Webster

For the General Director.

CW:JK

HOSPITAL

Please return to
Library War Service,
American Library Association,
Library of Congress, Washington, D.C.

Date

Name, number and address?

Number on Staff?

Bed Capacity?

Approximate number of books in library?

What agencies or persons are supplying reading matter and to what extent?

Is any local library cooperating?

How many books are needed?

How many scrap books are needed?

How many magazines are needed?

Do you wish reading matter for the contagious wards. which may be destroyed when it has served its purpose?

If so, in what quantity?

Who will have charge of the circulation of books?

To whom should books be addressed?

Would a librarian appointed by the A. L. A. War Service be acceptable to supervise the work, under the direction of the hospital authorities?

Remarks:

200m

UNIVERSITY OF ILLINOIS-URBANA
3 0112 044903943